FOR THE BEST
ON EARTH

FINAL DRIVE CHECK SHEET STAGE 1

Please submit a clear photograph of the machine's CE plate if possible like the one on the left.

Please also submit clearly legible photographs of the tags on the final drive like the examples on the left.

There should be two. There may be a tag on outward-facing visible gearbox side.

There will be also be a tag on the motor side of the drive – the side not immediately visible - although the cover plate may have to be removed.

ASTRAK UK
Wheatfield Road
Dunnikier Business Park
Kirkcaldy, KY1 3PD
United Kingdom

TEL **0330 555 2000**
EMAIL **sales@astrakgroup.com**

astrakgroup.co.uk

FINAL DRIVE CHECK SHEET - STAGE 2

In order that we may recognise your final drive, please fill in dimensions A, B, C, D and E.

Regarding the bolt holes – we are generally looking for equally spaced bolt holes. Sometimes all the holes are not immediately visible but we can quickly establish the facts on closer inspection – as, for example, in the picture on the left. On this drive there are 9 equally spaced bolt holes and one unequally spaced bolt hole. We would report this as 9 equally spaced bolt holes. Please don't hesitate to call us if there is any doubt.

MACHINE TYPE	
MODEL	
SERIAL No.	

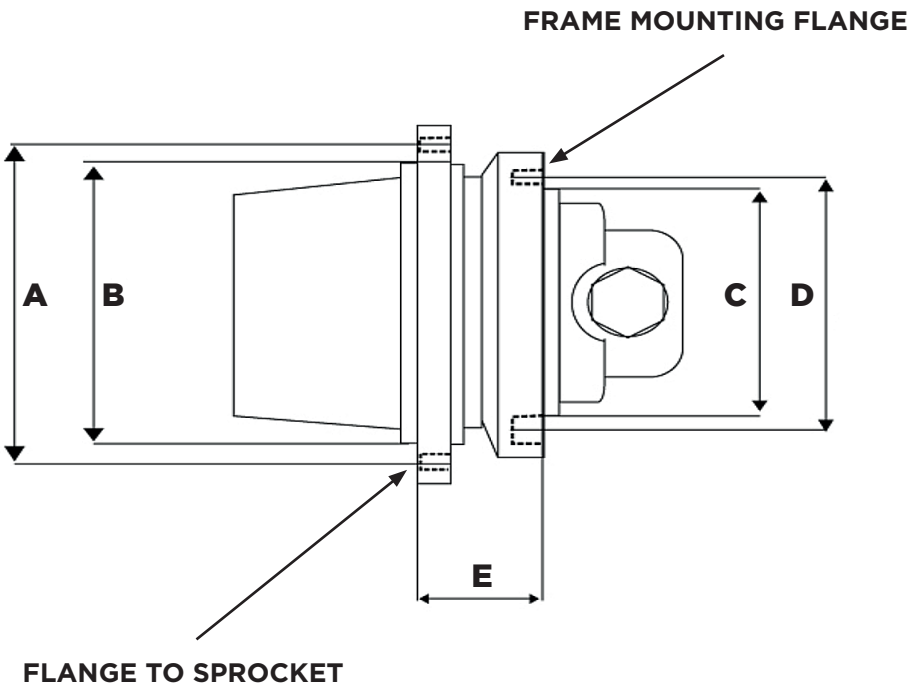

A	
B	
C	

D	
E	

FRAME MOUNTING FLANGE	
Number of holes	
Bolt size	

FLANGE TO SPROCKET	
Number of holes	
Bolt size	

IS YOUR EXISTING FINAL DRIVE SINGLE SPEED?	
YES	
NO	